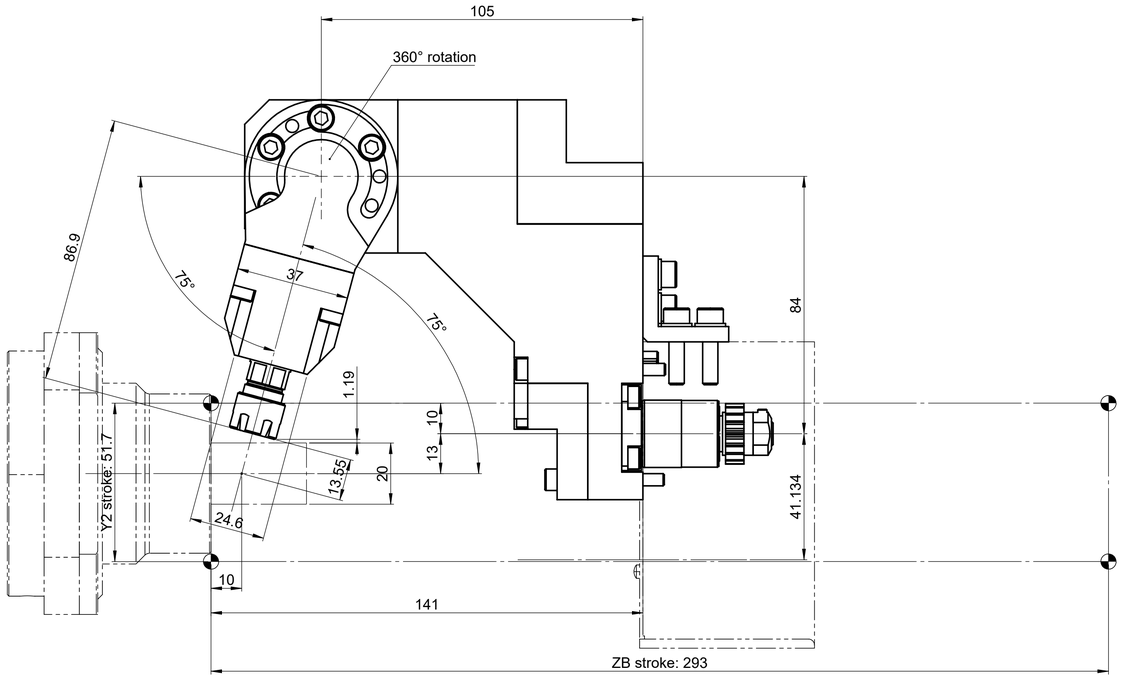

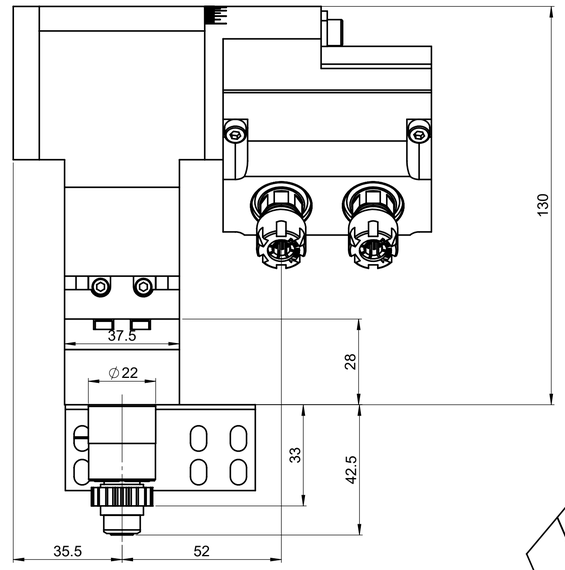

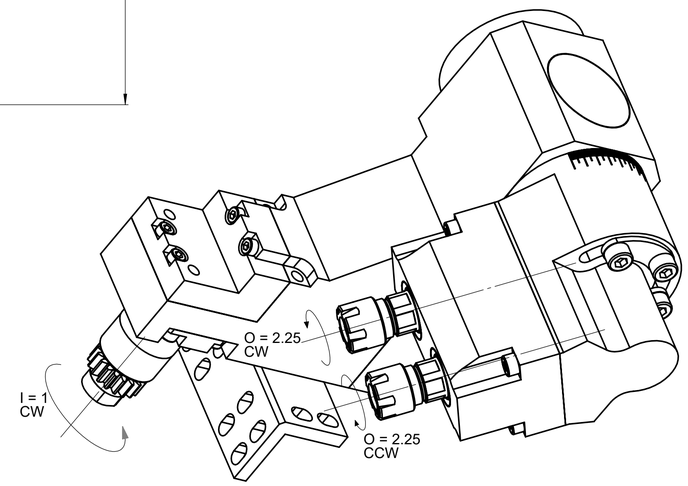

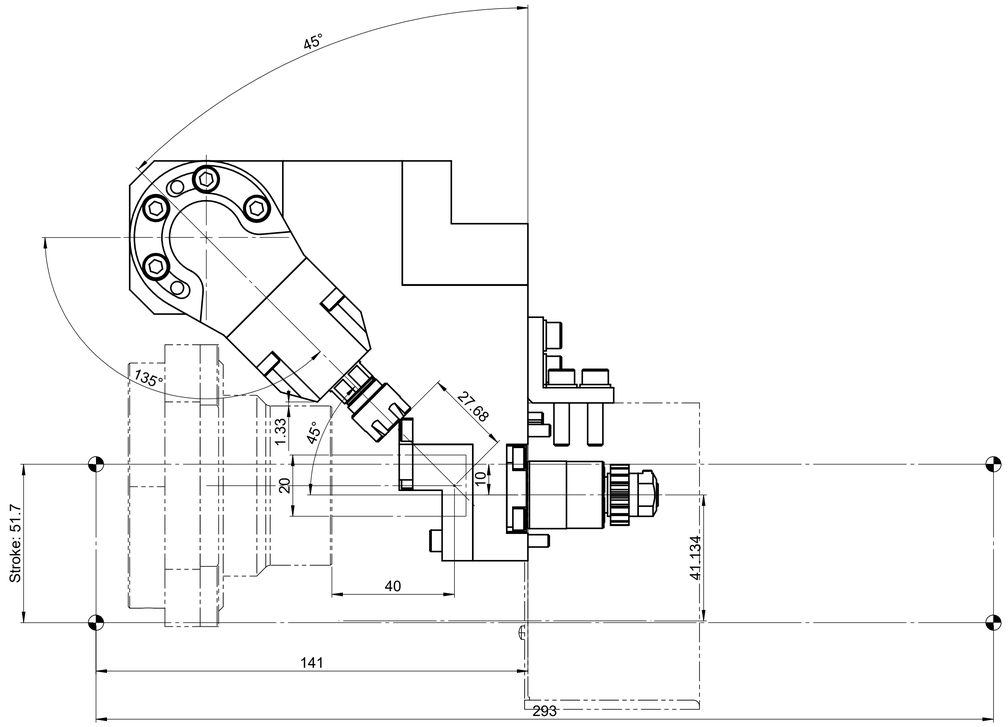

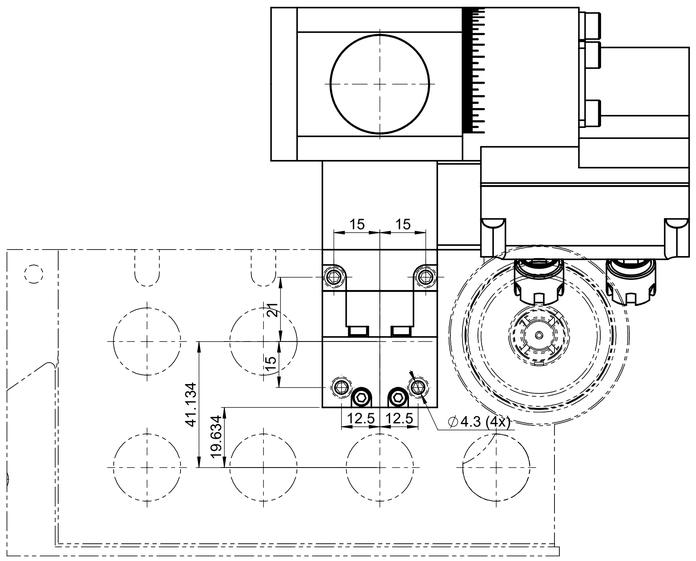

ANGLE ADJUSTABLE TOOL HOLDER
ATTACHMENT : 2xER11
i (n1:n2) : 1:2.25
DEGREE OF INCLINATION : 75° /135°
POSITION : BACK TOOL POST
COOLANT : No
MACHINE TYPES : STAR MICRONICS SR 20/32JII B

COMMENTS :
360° rotation possible, but usable from 75° to 135°.

The spindle support can be moved to the opposite side, or an additional support for two spindles can be installed there.

Compatible with station T2200.
For use on station T2100, a software adaptation can be provided by the machine manufacturer to reduce the risk of collision.
Stations T4100 and T4200 cannot be used, regardless of whether the tool is mounted on station T2200 or T2100.

A special collet for the subspindle may be required depending on the angle.
A 3 × 45° chamfer may also be required on the upper flange of the subspindle, depending on the angle.

INCLUDED :
Fastening screw : D912 4x35 (2x), D912 4x45 (2x), D912 5x20 (4x)
Washer : D125A M5 (4x)
Alu plug : 862-019-51-12
Clamping nut : 871-685-002

OPTIONS :
Clamp nuts, clamps, and wrench: see catalog «Accessories for tool holder».

Porte-outil à angle ajustable	© The reproduction, distribution and utilization of this document as well as the communication of its contents to others without express authorization is prohibited. Offenders will be held liable for the payment of damages. All rights are reserved in the event of the grant of a patent, utility model or design.	Echelle 1:1	Créé	Nogueira	27.08.2026
			Validé	Borgeaud	03.09.2026
0200-SC011-RADA00-2S01 PR	Révision A	PCM be driven.	PCM Precision Tooling SA +41 21 967 33 66 CH-1844 Villeneuve www.pcm.ch		